Product Dimensions and Weights **DIN 6921 Technical Specifications**

Metric DIN 6921 Hexagon Flange Bolts

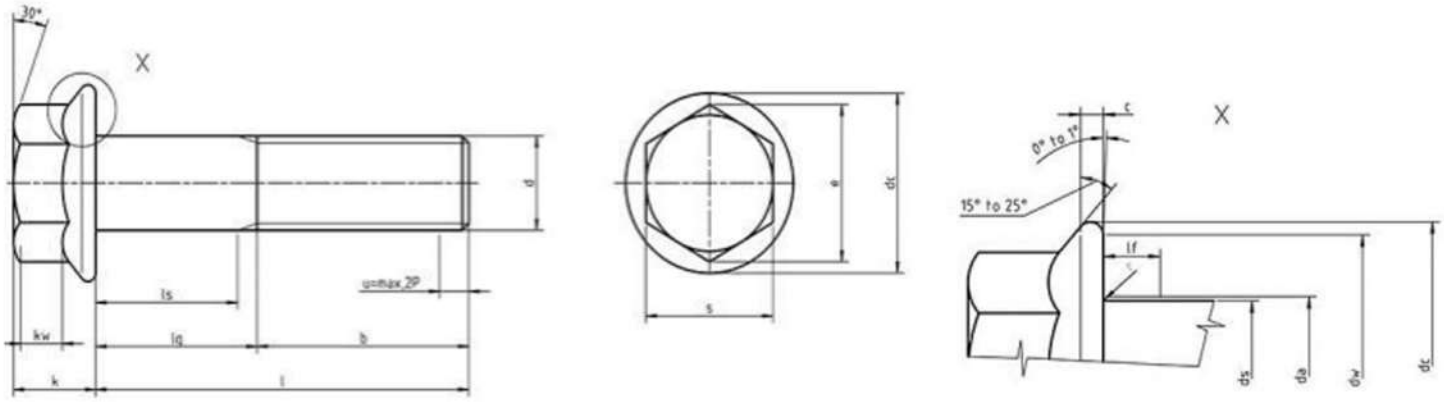

Dimensions of Metric DIN 6921 Hexagon Flange Bolts

Thread		M5	M6	M8	M10	M12	(M14)	M16	M20
size d		-	-	M8 x 1	M10 x 1.25	M12 x 1.5	(M14x1.5)	M16 x 1.5	M20 x 1.5
		-	-	-	(M10 x 1)	(M10 x 1.25)	-	-	-
P		0.8	1	1.25	1.5	1.75	2	2	2.5
C	Min.	1	1.1	1.2	1.5	1.8	2.1	2.4	3
da	Min.	5	6	8	10	12	14	16	20
	Max.	5.75	6.75	8.75	10.8	13	15.1	17.3	21.6
dc	Max.	11.8	14.2	17.9	21.8	26	29.9	34.5	42.8
dw	Min.	9.8	12.2	15.8	19.6	23.8	27.6	31.9	39.9
e	Min.	8.79	11.05	14.38	16.64	20.03	23.36	26.75	32.95
h	Max.	6.2	7.3	9.4	11.4	13.8	15.9	18.3	22.4
m	Min.	4.7	5.7	7.6	9.6	11.6	13.3	15.3	18.9
m´	Min.	2.2	3.1	4.5	5.5	6.7	7.8	9	11.1
s	Nominal size = max.	8	10	13	15	18	21	24	30
	Min.	7.78	9.78	12.73	14.73	17.73	20.67	23.67	29.16
r	Max.	0.3	0.36	0.48	0.6	0.72	0.88	0.96	1.2